Pi-Pico RX - Breadboard Version

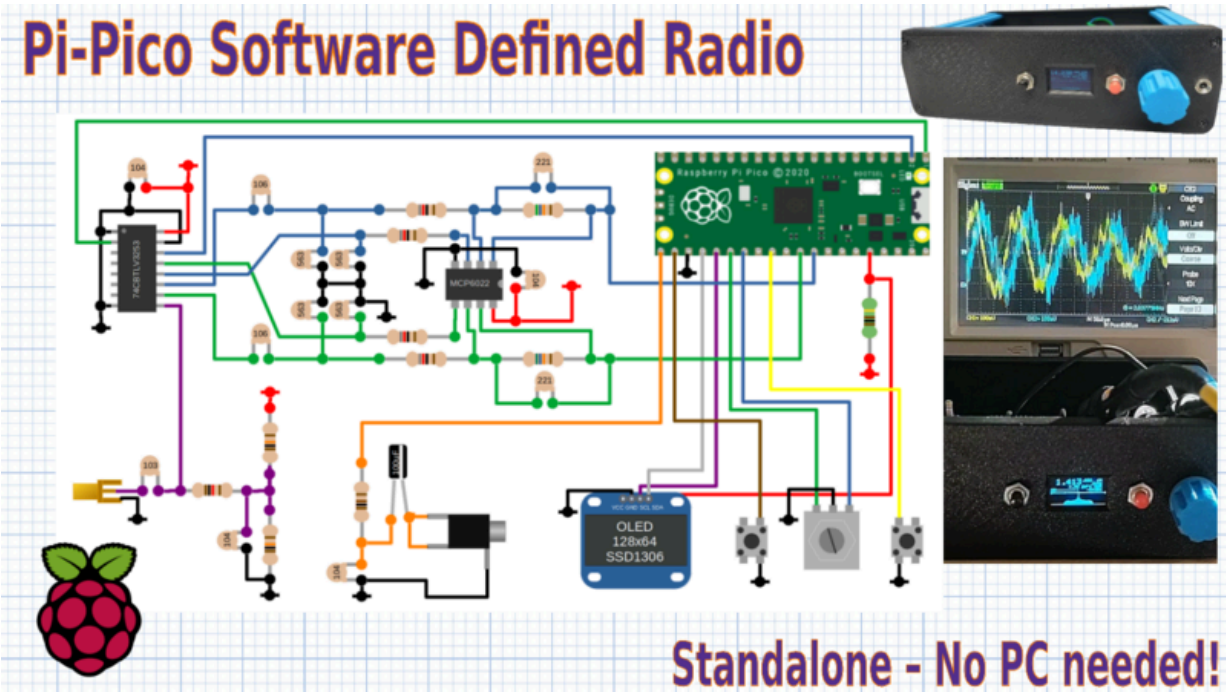

A couple of years ago, I built a basic yet capable radio receiver using a Pi Pico, and while I originally designed a custom PCB for it, this time I'm building an even simpler and cheaper version that can be built on a breadboard using (mostly) through-hole components.

I wanted to build a very minimal (but useful) design that I could use as a platform for experiments, tweaks and upgrades.

If you are interested in the original design or want to find out more about the technical details you can find all the info here. Most of the technical details are the same, so I will focus on the new features and improvements here.

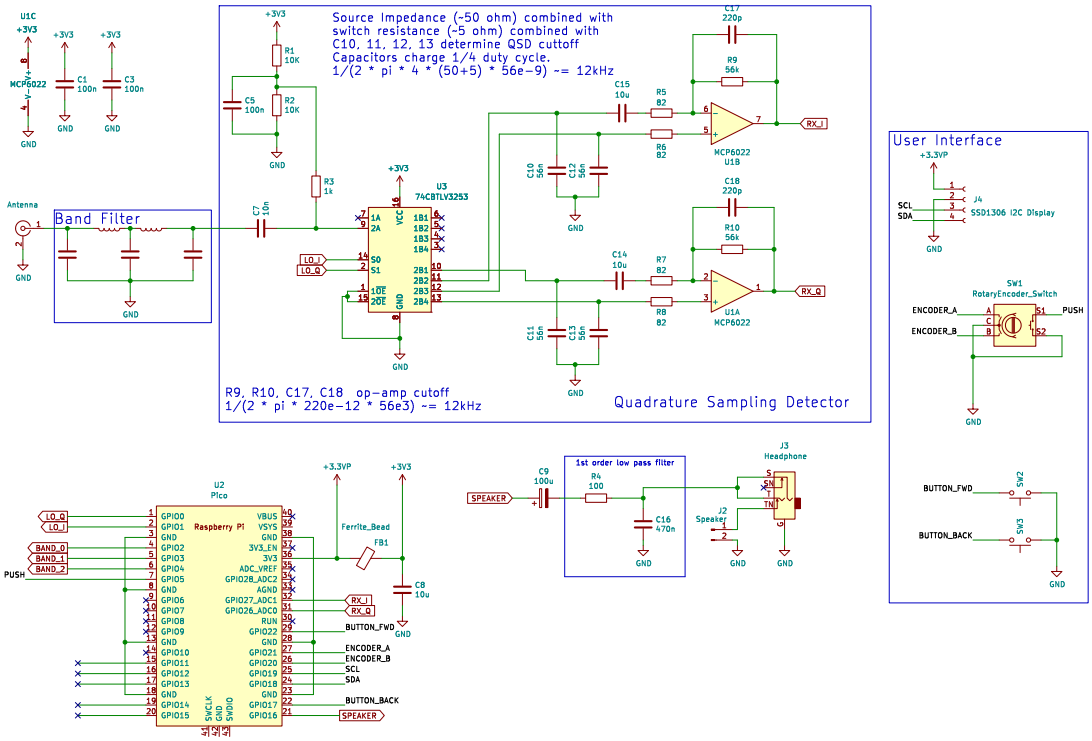

latest

Quick Links

You can find the code on the GitHub page including a precompiled firmware in .uf2 format.

What Can This Receiver Do?

The receiver covers frequencies up to 30MHz, including commercial broadcasts on Longwave, Medium Wave, Shortwave, and the HF amateur radio bands. What's great about this design is that it's completely standalone—it doesn't need a PC or sound card and can run for hours on just three AAA batteries.

Here are the specs:

- 0 - 30MHz coverage
- CW/SSB/AM/FM reception
- OLED display
- simple spectrum scope
- headphone output
- 500 general-purpose memories
- runs on 3 AAA batteries
- less than 50mA current consumption

Parts List

Item	Value	QTY	Description	Example
R1, R2	10k Ohm	2 off	Resistor (Metal Film)	
R3	1k Ohm	1 off	Resistor (Metal Film)	
R4	100 Ohm	1 off	Resistor (Metal Film)	
R5, R6, R7, R8	82 Ohm	4 off	Resistor (Metal Film)	
R9, R10	56k Ohm	2 off	Resistor (Metal Film)	
C1, C3, C5	100n Farad	3 off	Capacitor (Ceramic)	

latest

Item	Value	QTY	Description	Example
C7	10n Farad	1 off	Capacitor (Ceramic)	
C9	100u Farad	1 off	Capacitor (Electrolytic)	
C10, C11, C12, C13	56n Farad	4 off	Capacitor (Ceramic)	
C14, C15, C8	10u Farad	3 off	Capacitor (Ceramic)	
C16	470n Farad	1 off	Capacitor (Ceramic)	
C17, C18	220p Farad	1 off	Capacitor (Ceramic)	
IC1		1 off	MCP6022 Dual Operational Amplifier	https://tinyurl.com/3zb279aa
IC2		1 off	Raspberry Pi Pico (or pico 2)	https://tinyurl.com/mpjc2pzn
IC3		1 off	74CBTLV3253 4:2 Analog Multiplexer	https://tinyurl.com/kuvmardh
SW1		1 off	Rotary Encoder with push switch	https://tinyurl.com/sepnzwwb
SW2, SW3		2 off	Push Button Switch (Momentary)	https://tinyurl.com/d7s957vz
L1/FB1	100u Henry	1 off	Inuductor/Ferrite Bead	https://tinyurl.com/y94cnnr6
Headphone Connector		1 off	3.5mm Stereo Jack	https://tinyurl.com/59cfmcxz
Display		1 off	128x64 I2C OLED Display 0.96 inch SSD1306	https://tinyurl.com/4w7f4p9a
Antenna Connector		1 off	BNC or SMA female connector	https://tinyurl.com/yrca5dsk

The Design Walkthrough

latest

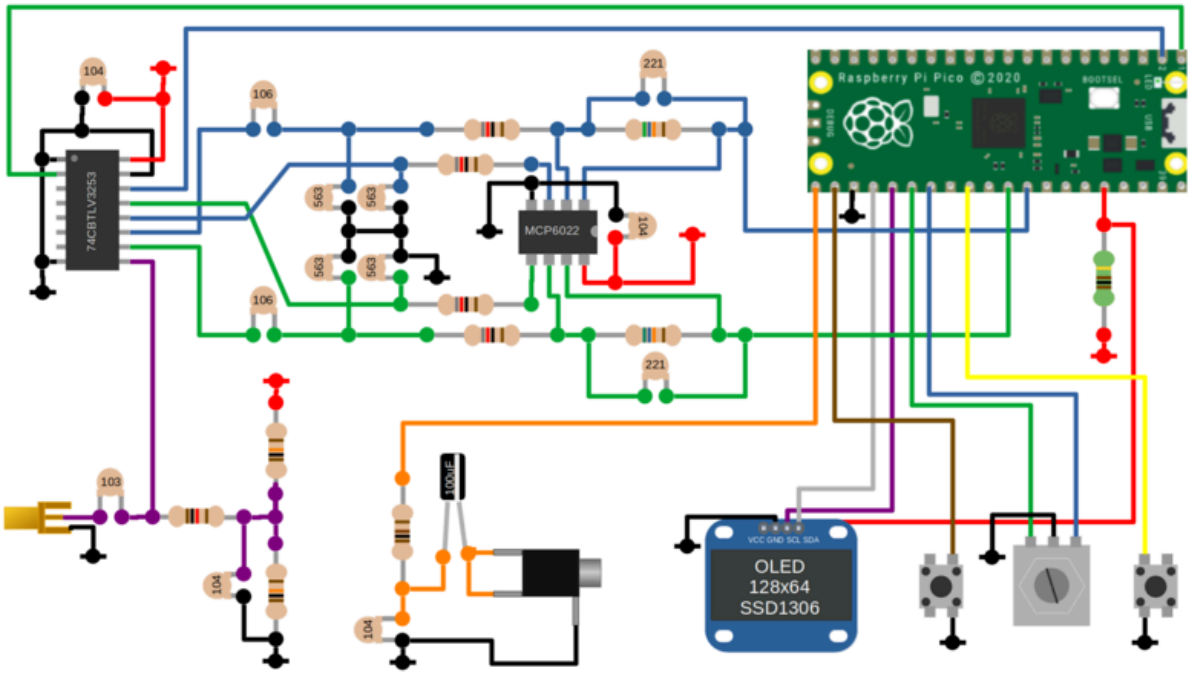

At the heart of this receiver is a Tayloe detector, which is popular for its simplicity and performance. The detector converts high-frequency RF signals into lower-frequency IQ signals that the Pi Pico's Analog-to-Digital Converter (ADC) can sample. This design handles frequencies up to 30MHz, although the ADC has a bandwidth of only 250kHz.

latest

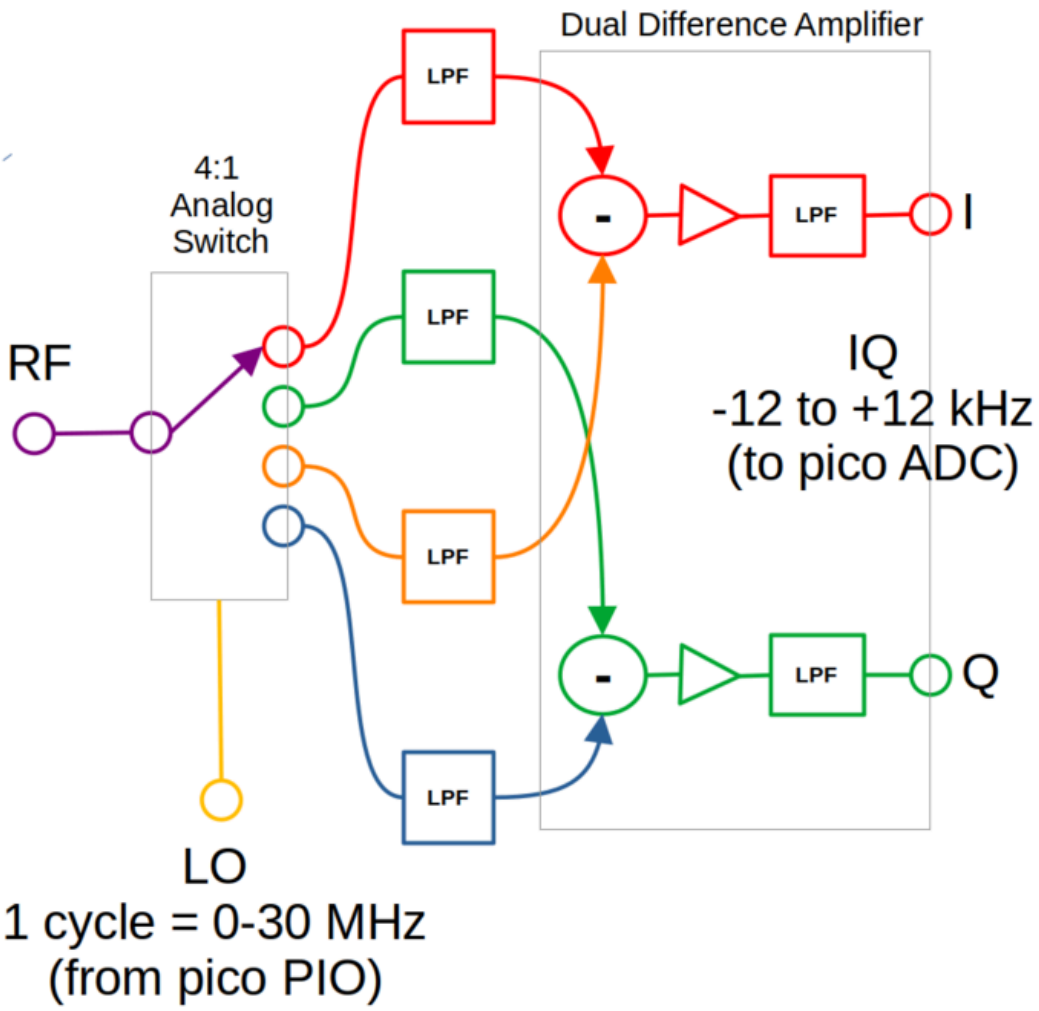

The local oscillator, necessary for the detector to function, is generated directly by the Pi Pico using its PIO feature. This oscillator drives a 4-way analogue switch, which samples the incoming signal in four different paths, each covering a quarter of the local oscillator cycle.

latest

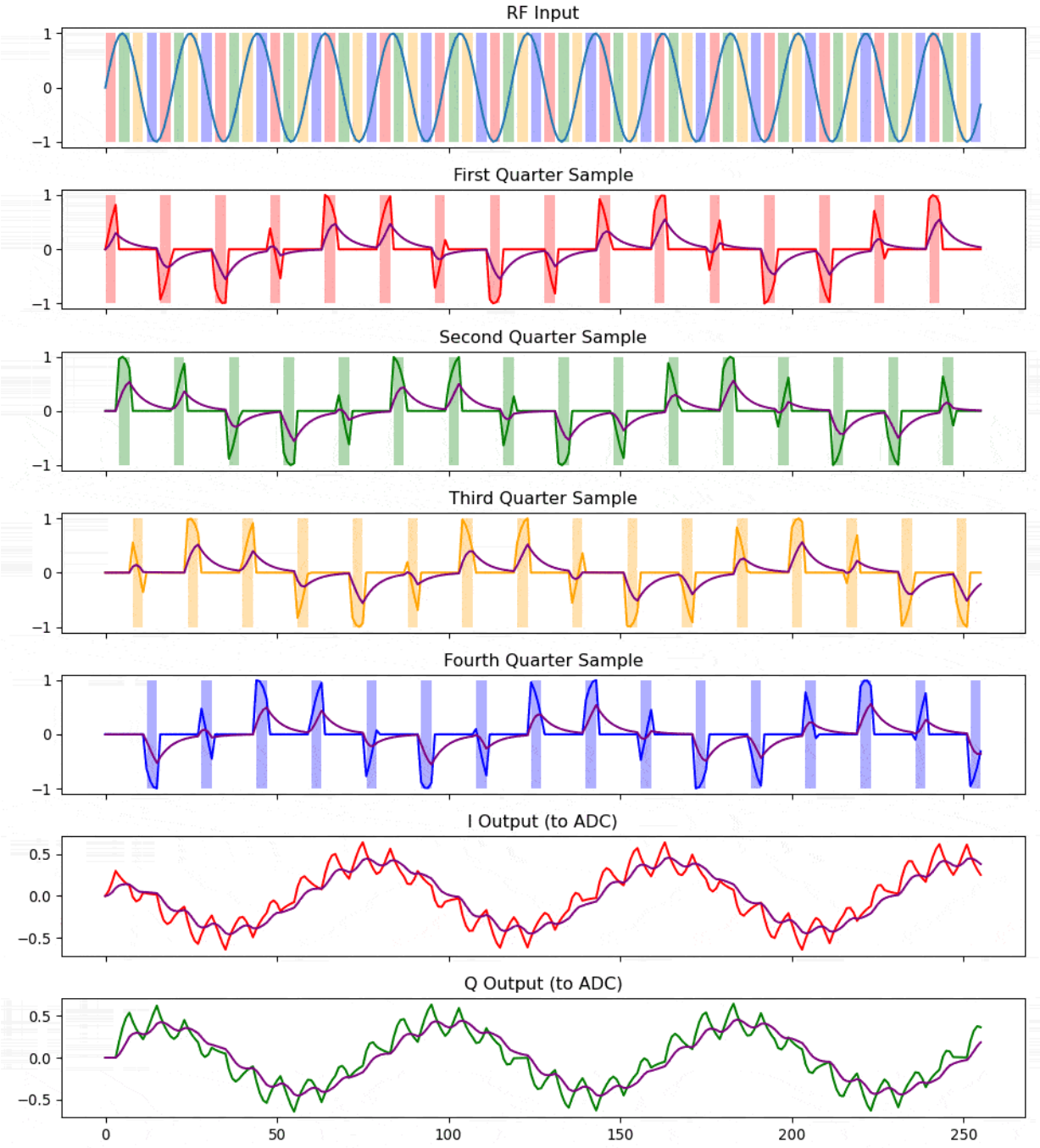

The I and Q signals generated by the op-amps contain all the information needed to demodulate the signals. With both I and Q signals, we can determine the amplitude, phase, and frequency, including whether the signal frequency is higher or lower than the local oscillator.

The audio interface in this design uses a simple PWM method. Although it's basic, it performs surprisingly well. The RC low-pass filter removes the PWM ripple and the output is strong enough to drive headphones directly or even a small speaker, though an external amplifier is recommended for better performance.

Improvements and Tweaks

Since building the original design, I've received a lot of feedback and made several key improvements to enhance both performance and usability.

1. Capacitors to Prevent Op-Amp Saturation

latest

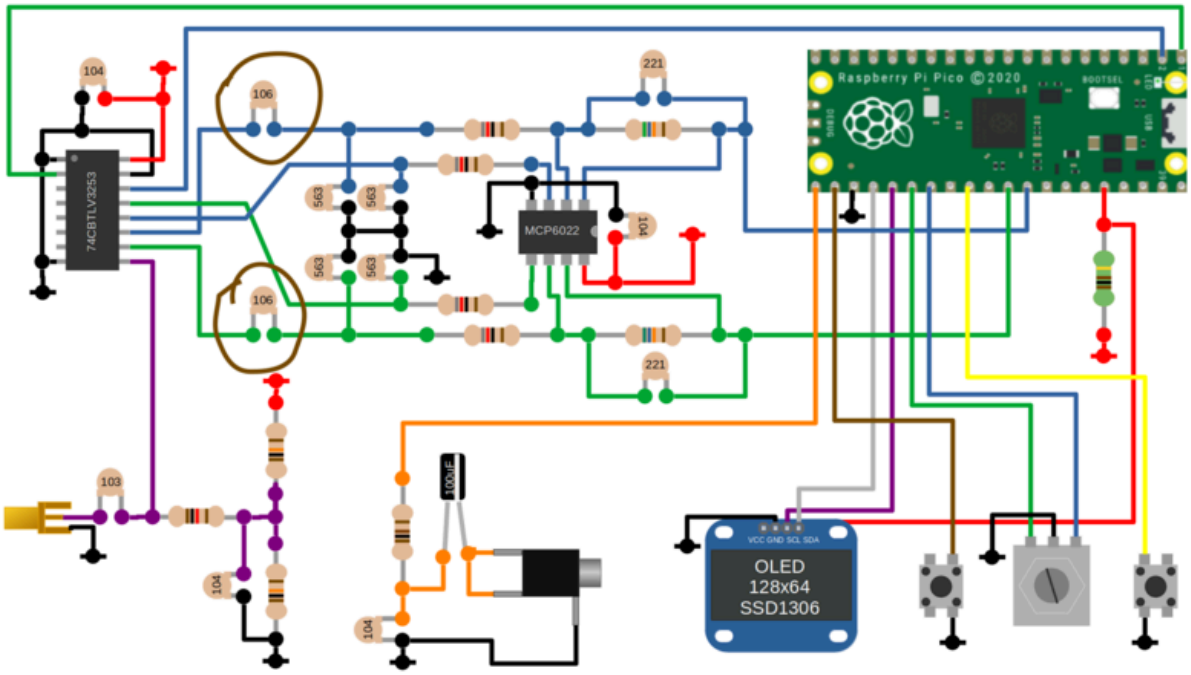

One of the issues that has been addressed was the saturation of the op-amps at higher frequencies. One or both op-amps in the Tayloe detector would saturate, leading to poor rejection of aliased signals. I quite a few changes to remedy the solution, but in the end the solution came from the truSDX transceiver. The addition of these two capacitors solved all the issues of op-amp saturation on the high bands and I am getting much better performance.

2. Improved Frequency NCO resolution by changing the system clock frequency on the fly.

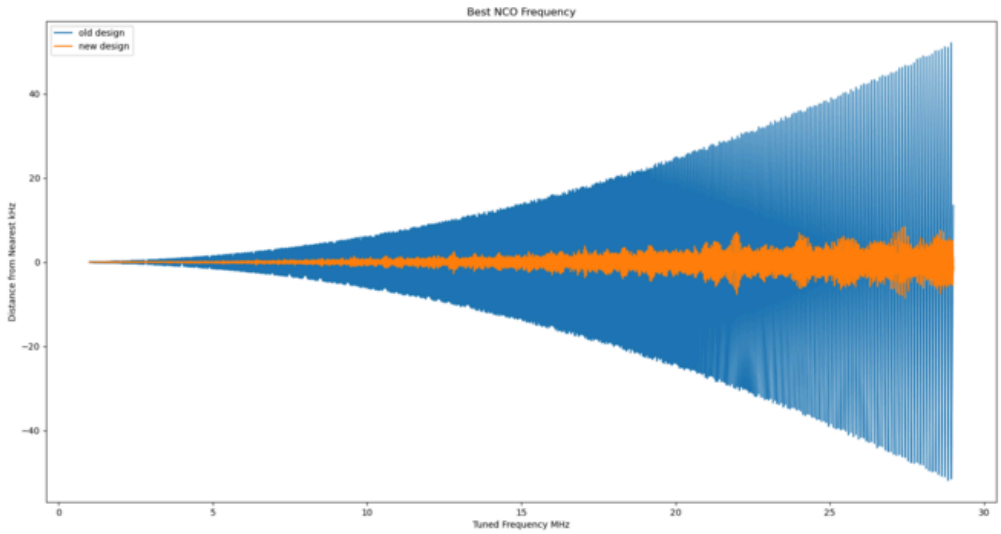

Another major improvement involves the frequency accuracy of the Numerically Controlled Oscillator (NCO). In the original design, I used the fractional dividers in the Pi Pico's PIO peripheral to generate a local oscillator frequency close to the desired frequency. However, this method only allowed me to get within about 100kHz of the target frequency. While this was sufficient given the 250kHz bandwidth of the ADC, I was able to get even better resolution by making small changes to the system clock frequency.

The firmware originally ran at 125MHz, but by tweaking the PLL, the system clock frequency can be varied between 125MHz and 133MHz. 133MHz is the maximum frequency without overclocking. There are 23 possible system clock frequencies in this range. Choosing the best combination of system clock and PIO divider gives a resolution of ~ +/-8kHz of the desired frequency.

latest

This improvement also allows for a narrower bandwidth of about +/-12kHz, now we can oversample the I and Q signals by a factor of 10, which greatly improves the rejection of alias signals which was a weakness

in the original design.

Note: Although the PIO-based local oscillator has a resolution of +/-8kHz (previously ~+/-60kHz). The receiver achieves an overall frequency resolution much better than 1Hz. The software implements a second, very-high-resolution, NCO and mixer in the front end of the receiver to do the fine-tuning.

3. Switching to a More Affordable Op-Amp

With the improved frequency accuracy and reduced bandwidth, it is now possible to switch to a more affordable operational amplifier. The LT6231 op-amp, is a popular choice in Tayloe detector designs due to its exceptionally low noise performance. The original design required a gain-bandwidth product (GBP) of 60MHz, well within the 215MHz limit of the LT6231. However, the LT6231 is relatively expensive, costing about twice as much as the Pi Pico.

Thanks to the improvements in frequency accuracy and the ability to oversample, the new design now requires a GBP of less than 10MHz. This allowed me to switch to an MCP6022 op-amp, which has a GBP of 10MHz but costs less than half as much as a Pi Pico. It doesn't have the same low-noise performance as the LT6231, but it is sill good enough that it doesn't limit the receiver's performance. This change not only reduces the overall cost of the project but improves the receiver's overall performance.

Antenna and Enclosure

A random wire antenna in a high location preferably outdoors, or in the attic would be ideal for this type of receiver. If you want an indoor antenna, or something a bit more portable, I have had pretty good results using a you-loop antenna, it is a clever design that cancels noise.

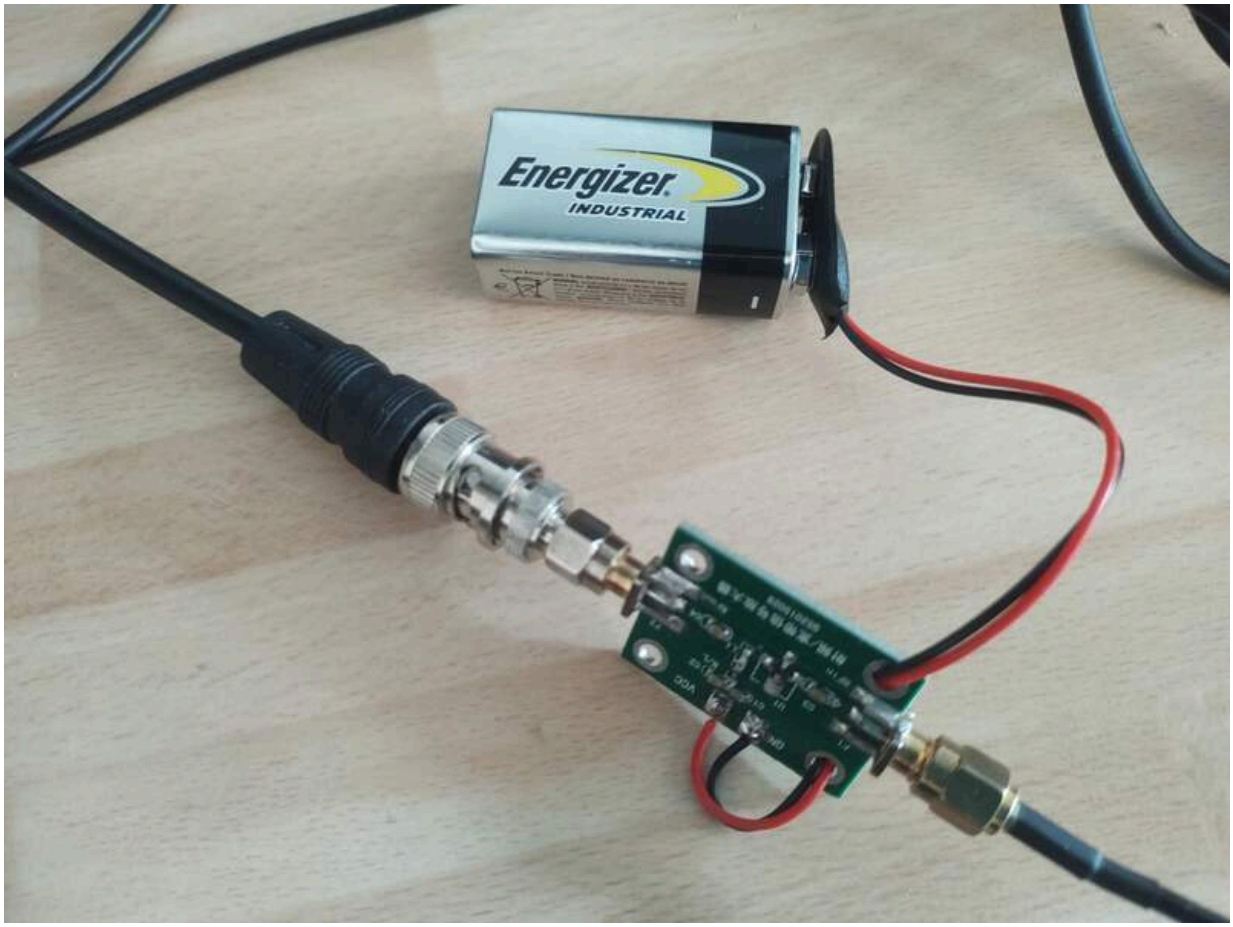

The only downside is that the output level tends to be quite low, so you need a sensitive receiver or some kind of pre-amplifier. I'm just using a cheap wideband LNA I bought online. I have used this setup for all the experiments in this demo.

latest

Enclosure

For the enclosure, I designed a 3D-printed case in FreeCAD. Since this is an experimental receiver, I will be leaving the lid off!

Testing the Receiver

I've tested the receiver by tuning into various broadcast stations and exploring the HAM bands. I also connected it to a PC soundcard to experiment with digital modes like FT-8. I have been pleased with the results, with successful signal reception from multiple continents, even using an indoor antenna.

Check out the video of the receiver in action.

Conclusion

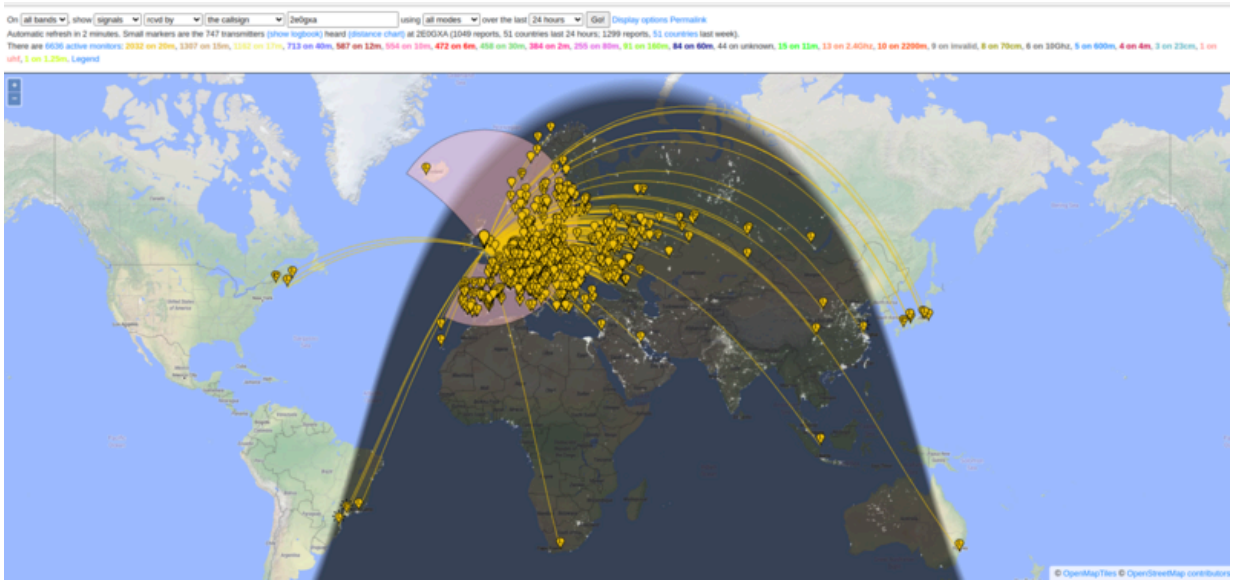

This SDR receiver would be a great project for anyone getting started in home-brew radio construction, or perhaps for someone looking for something fun to build with their pi-pico. While it might not live up to expensive commercial radios, its low cost and simplicity make it a valuable tool for receiving signals from around the globe.

latest